Quick Start Guide

Type 2BP UWB Module

Evaluation Board Quick Start Guide -Rev. 4.3

Table of Contents

1 Evaluation Board 3
2 Running Demo 3
3 Precautions When Using the Type2BP EVK 6
Revision History 7

Figures

Figure 1: Evaluation Board 3
Figure 2: Install Python Libraries 4
Figure 3: Run Modules Using Python Script File 5
Figure 4: Log Output on Windows Command Prompt 5

Tables

Table 1: Document Conventions 2

About This Document

This document provides quick instructions to run Murata Type 2BP EVB Rev. 4.1. It is assumed that you have a pair (2 pcs) of Type 2BP EVBs.

- Type 2BP EVB Rev 4.0 and later: Default installation program is PnP binary.
- Type 2BP EVK Rev 3.5 or earlier: Default installation program is Standalone mode binary. (-CE: Controlee mode, -CR: Controller mode, -A: Ranging for Apple device mode)

Audience & Purpose

This document details the process of getting started with Murata's Type 2BP EVB. This document is intended audience includes any customer looking to integrate this module into their product. In particular, software and systems engineers.

Document Conventions

Table 1 describes the document conventions.

Table 1: Document Conventions

Conventions	Description
	Warning Note Indicates very important note. Users are strongly recommended to review.
	Info Note Intended for informational purposes. Users should review.
	Menu Reference Indicates menu navigation instructions. **Example**: Insert→Tables→Quick Tables→Save Selection to Gallery
	External Hyperlink This symbol indicates a hyperlink to an external document or website. **Example**: Type 2BP Product Page Click on the text to open the external link.
	Internal Hyperlink This symbol indicates a hyperlink within the document. **Example**: Evaluation Board Click on the text to open the link.
`Console input/output or code snippet`	**Console I/O or Code Snippet** This text ***Style*** denotes console input/output or a code snippet.
`# Console I/O comment` `// Code snippet comment`	**Console I/O or Code Snippet Comment** This text ***Style*** denotes a console input/output or code snippet comment. • Console I/O comment (preceded by "#") is for informational purposes only and does not denote actual console input/output. • Code Snippet comment (preceded by "//") may exist in the original code.

1 Evaluation Board

Type 2BP EVB is designed to be compatible with NXP UWB FreeRTOS SDK. Type 2BP EVB Rev 4.1 comes with PnP(Plug and Play) mode sample application.

USB Connector provides UART communication between QN9090 MCU and PC via FTDI FT230XQ USB-UART converter. USB Connector is used for power supply as well.

Figure 1 shows the various parts of the evaluation board.

Figure 1: Evaluation Board

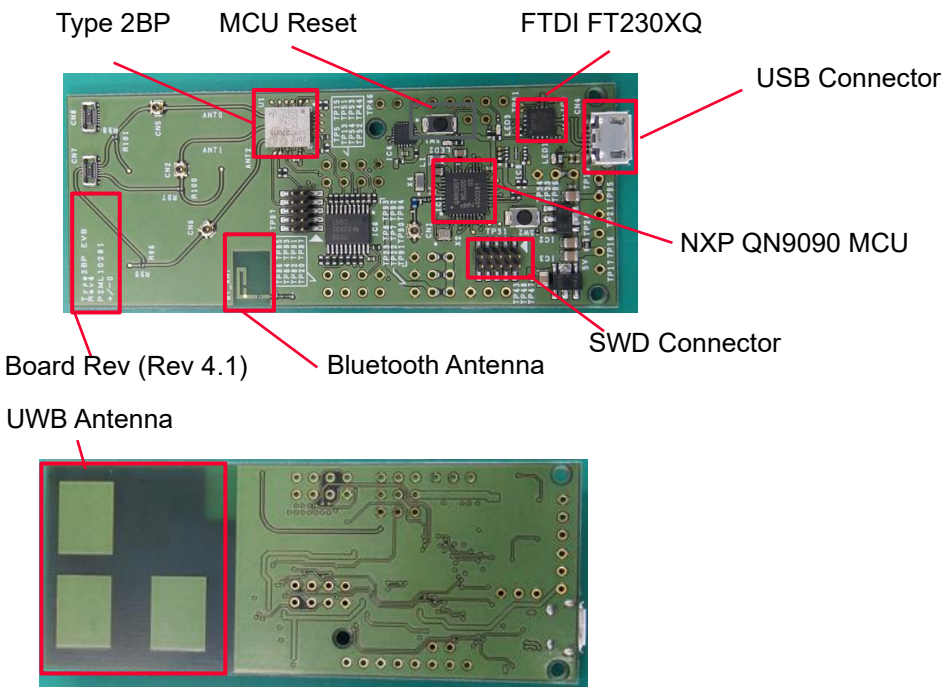

2 Running Demo

1. If you don't have terminal tool such as Tera Term or Putty, please find and install from internet.
2. Attach a pair (2 pcs) of Type 2BP EVBs with your PC using micro-USB cables.
3. Check the COM port numbers of each board on Device Manager. If you don't have the appropriate driver, install FTDI VCP Driver.
4. Please install a python tool to run the python script (Python 3.7 or later) from Python Download .
   - In addition, install the following libraries as shown in **Figure 2**.

```
pip install matplotlib pyserial zmq
```

Figure 2: Install Python Libraries

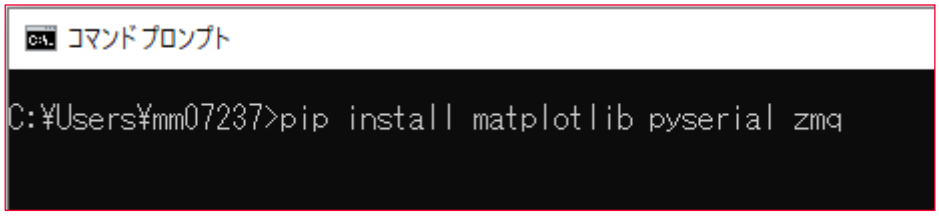

5. The Type2BP EVK Rev4.1 comes pre-installed with SDK v04.02.01 binary file by default. The corresponding python script file to be used in this case is MTD-SCP-067-B_DS-TWR_SR150_Unicast_v04.02.01.py. This python script file is available in "Test Guide" on Type 2BP Document Site.

> For information about the binary files pre-installed on the EVK, please refer to "Type2BP EVK Revision information" on Type 2BP Document Site.
> (EVK Rev4.1 has the binary file for SDKv4.2.1 pre-installed.)

> If you want to operate with the latest SDK environment, you will need to rewrite the binary files and use the optimal script files.
> There are specific combinations of binary files and Python script files for each version of the SDK, so please be cautious.
> For detailed information and procedures, please refer to "PnP Test Guide" on Type 2BP Document Site.

> The PnP script files can be obtained from Test Guide, while information about binary files can be found on each SDK site's documentation.

> The operation procedure for PnP mode has changed to a Bat file in SDK v04.06.00.
> For detailed information and procedures, please refer to "PnP Test Guide" on Type 2BP Document Site.

6. Open two Command prompt windows.
   One is as Initiator; another is as Responder role.

   Run modules using Python script file. Enter the following command.

   For Initiator:

```
py MTD-SCP-067-B_DS-TWR_SR150_Unicast_v04.02.01.py i COM20
```

   For Responder:

```
py MTD-SCP-067-B_DS-TWR_SR150_Unicast_v04.02.01.py r COM21
```

> COM port number varies depending on environment.

Figure 3: Run Modules Using Python Script File

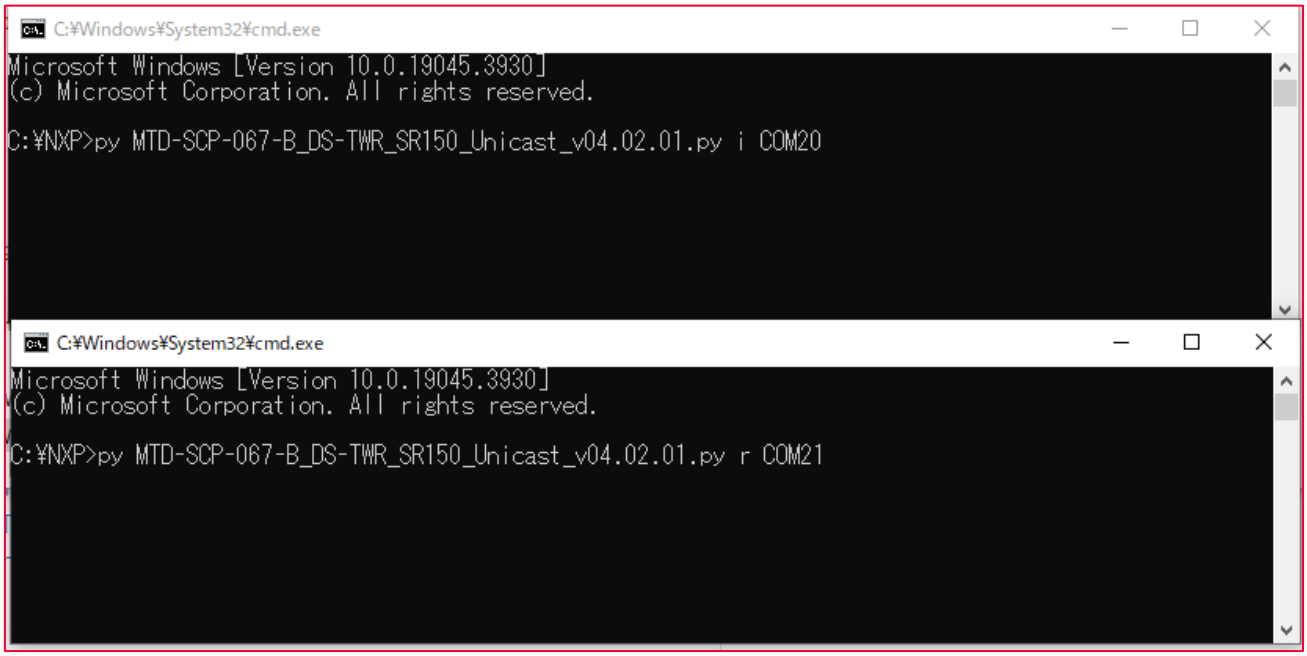

7. You will see log output on Command prompt windows as shown in **Figure 4**. If you don't see any output, push the MCU reset button.

Figure 4: Log Output on Windows Command Prompt

3 Precautions When Using the Type2BP EVK

When conducting evaluations using the Type2BP EVK, the following settings are required to ensure the EVK operates properly.

1. Read the Tx Power Calibration value from the module's OTP
2. Apply antenna gain and trace loss values to the read OTP value
3. Set the optimized Tx Power value for the module

The Tx Power Calibration value is written to the module's OTP. This setting is adjusted so that the output power at the module's antenna terminal is -41.3 dBm/MHz. By reflecting the antenna gain and trace loss values used in the set against this value, it is optimized to ensure it does not exceed the specified UWB specifications.

For technical information regarding Tx Power settings, refer to the Type 2BP Hardware Design Guide (Section 4.1 Tx Power).

Patch files are provided for some demo applications as examples of implementing the above Tx Power settings. The sample projects to which these patch files apply are as follows:

demo_ranging_controlee
demo_ranging_controller
demo_nearby_interaction

When running demo applications other than those listed above, refer to the implementation example in Type 2BP Applying Calibration Values (6 Apply Calibration Values in OTP) and implement appropriately.

The provided patch files are intended for application to the Type2BP EVK.
Custom implementation may be required for your specific product.

When using the Type2BP-EVK in Japan

The Type2BP is a product certified in Japan under the provisions of Article 38-24, Paragraph 1 of the Radio Law. This law requires operation while maintaining compliance with the aforementioned provisions.

If you operate the Type2BP EVK without applying the above-mentioned settings, it may not comply with the technical standards stipulated by the Radio Law. Therefore, when operating this product, ensure the above-mentioned settings are applied.

Use only the patch antenna implemented on the EVK.

Revision History

Revision	Date	Author	Change Description
1.0	Feb 19, 2021		Initial release
2.1	Jun 14, 2021		Updated for EVB Rev 2.1 design
2.1 A	Jul 16, 2021		Removed section 3
3.0	Jul 30, 2021		Updated for EVB Rev 3.0 design
4.0	Aug 10, 2022		Updated for EVB Rev 4.0 design
4.1	Nov 06, 2023		Updated for EVB Rev 4.1 design
4.1A	Mar 18, 2024		Added pre-install FW information Document format changed
4.2	Sep 19, 2024		Added information regarding precautions and other details for operating in PnP mode.
4.3	Nob 20, 2025		Added Precautions When Using the Type2BP EVK

Copyright © Murata Manufacturing Co., Ltd. All rights reserved. The information and content in this document are provided “as-is” with no warranties of any kind and are for informational purposes only. Data and information have been carefully checked and are believed to be accurate; however, no liability or responsibility for any errors, omissions, or inaccuracies is assumed.

All brand and product names are trademarks or registered trademarks of their respective owners.

Specifications are subject to change without notice.